T83



A - CONCEPT / B - LAMP TYPE / C - STANDARD COLOR OPTION / D - CANOPY FOR CORD / E - CORD OPTION

F - CANOPY FOR STEM

A Concept

T83:

Code	Name	Wattage
RDS	Rods for T83-16A	
T83-12A	T83 - 12in (Acrylic)	
T83-16A	T83 - 16in (Acrylic)	

BAA/BABA: Please add either BAA or BABA to end of part number if job requires.

B Lamp Type

Sockets:

Code	Name
MED5	E26 Medium Base Socket

LBAC1-1 - Indoor Only:

Code	Name
LBAC1-1-1600-XXK	LBAC1 - Single Module, 1600LM, 15W
LBAC1-1-1800-XXK	LBAC1 - Single Module, 1800LM, 17W
LBAC1-1-2000-XXK	LBAC1 - Single Module, 2000LM, 18W
LBAC1-1-2500-XXK	LBAC1 - Single Module, 2500LM, 23W
LBAC1-1-3000-XXK	
LBAC1-1-4000-XXK	LBAC1 - Single Module, 4000LM, 36W
LBAC1-1-5000-XXK	LBAC1 - Single Module, 5000LM, 45W

Fixture Size Option

C Standard Color Option

Powder Coat Finishes:

Code	Name
GXX	To be determined.
G0	Black
G1	White
G2	Red
G4	Blue
G5	Green
G6	Brown
G8	Dark Bronze
G9	Silver
G10	Dark Green
G12	Brushed Aluminum
G16	Silver Wrinkle
G27	Matte Black
G28	Sun Gold
G41	Sand
G42	Pastel Blue
G43	Pale Green
G44	Oxblood
G45	Emerald

D Canopy for Cord

Covert Cord Canopy:

Code	Name
630C-10FT	Covert Canopy + Cord 10ft
630C-20FT	Covert Canopy + Cord 20ft
630C-1AC-10FT	Covert Canopy + Cord and Aircraft Cable 10ft
630C-1AC-20FT	Covert Canopy + Cord and Aircraft Cable 20ft
630C-3AC-10FT	Covert Canopy + Cord and 3X Aircraft Cable 10ft
630C-3AC-20FT	Covert Canopy + Cord and 3X Aircraft Cable 20ft
HHH-10ft	Hub Hex Hook

E Cord Option

Cords:

Code	Name
CBK	Standard Cord Black
CWH	Standard Cord White
CSL	Standard Cord Silicone

F Canopy for Stem

Stem Canopy:

Code	Name
640-50	Canopy kit for 1/2" Rigid Stem
640-75	Canopy kit for 3/4" Rigid Stem
642-50	Aligner Canopy Kit for 1/2" Swivel Stem
642-75	Aligner Canopy Kit for 3/4" Swivel Stem

2476 Edison Blvd
Twinsburg, Ohio 44087

p: (216) 912-7050
e: sales@bocklighting.com

T83

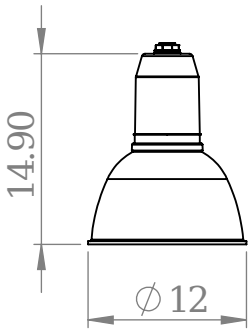

T83-12

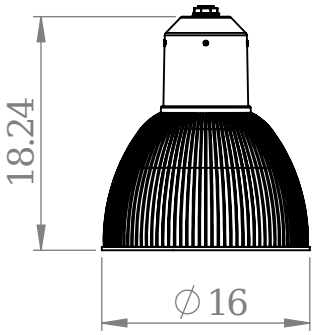

T83-16

Standard Color Option

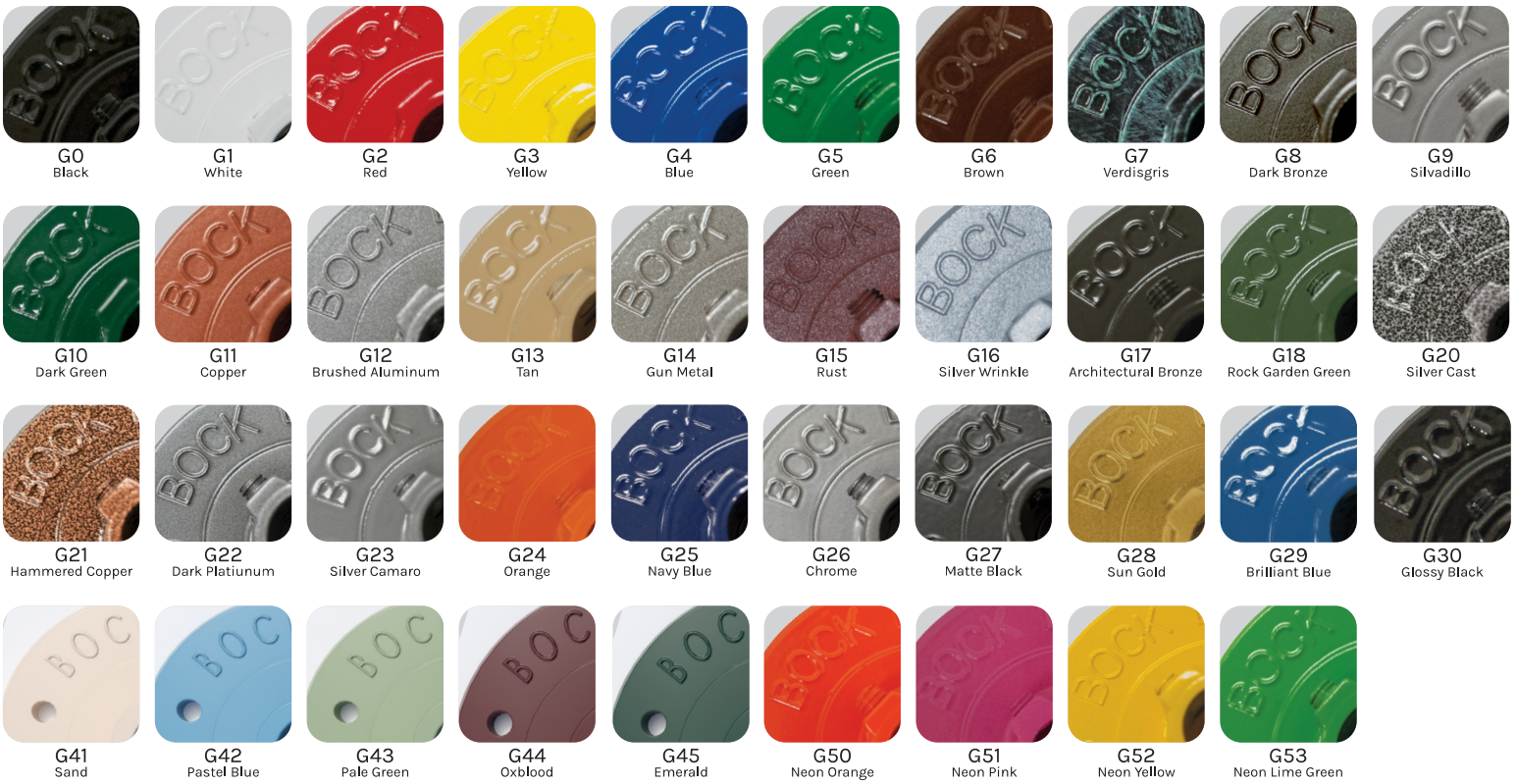

Canopy for Cord

2476 Edison Blvd
Twinsburg, Ohio 44087

p: (216) 912-7050
e: sales@bocklighting.com

T83



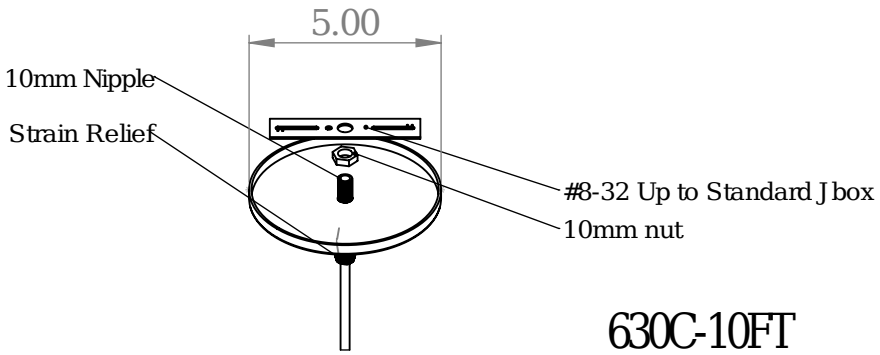

Cord Option



Canopy for Stem

2476 Edison Blvd
Twinsburg, Ohio 44087

p: (216) 912-7050
e: sales@bocklighting.com

T83

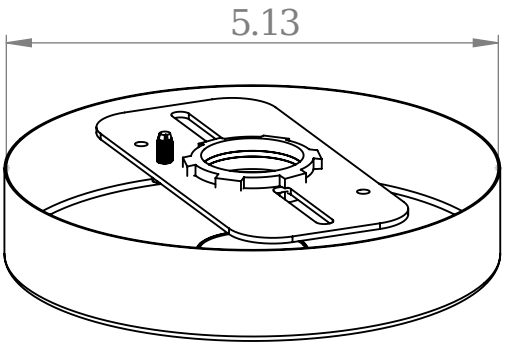

640-50 - 1/2" NPT CANOPY

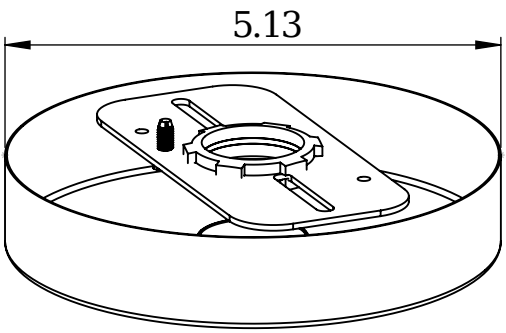

640-75 - 3/4" NPT CANOPY

Stem Length Option

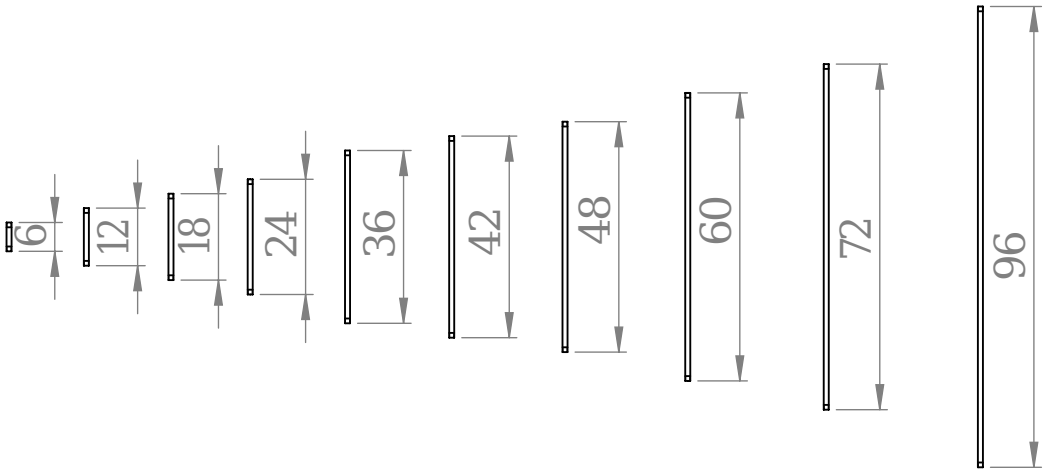

ST3
3/4" - 14 NPT
1.05" DIA
ST3-XX

ST2
1/2" - 14 NPT
0.84" DIA
ST2-XX

2476 Edison Blvd
Twinsburg, Ohio 44087

p: (216) 912-7050
e: sales@bocklighting.com